VitrA

Sliding Front Panel : 140 cm + Protect Plus Glass (Shiny Silver Frame)

Product Code: 65650002323

Collection: Universal

Technical Specifications

Colour	
Series	Universal

VitrA Global
vitra@eczacibasi.com.tr
https://www.vitraglobal.com/ - https://www.instagram.com/vitrabathrooms/

Sliding Front Panel : 140 cm + Protect Plus Glass (Shiny Silver Frame)

Product Code: 65650002323
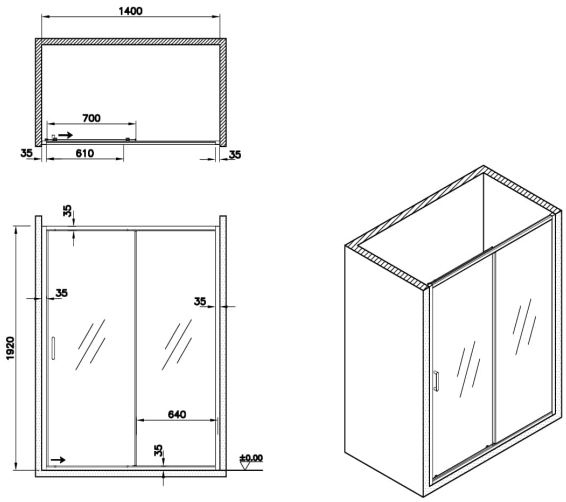
2A Technical Drawing