VitrA

Core Mirror Cabinet

Product Code: 67614

Collection: Core

Technical Specifications

Body Coating	PVC
Body Material	MDF
Certificates	VALUE: FSC
Colour	
Connection Type	Wall hung
Designer	VALUE: VitrA Design Team
Dimensions	80
Double Mirror	VALUE: No
Driver IP	IP67
Driver Watt	16,5 W
Energy Label	G
Front Coating	VALUE: Melamine

VitrA Global
vitra@eczacibasi.com.tr
https://www.vitraglobal.com/ - https://www.instagram.com/vitrabathrooms/

VitrA

Core Mirror Cabinet

Product Code: 67614

Front Material	MDF + Mirror
Handle	No handle
Handle Material	VALUE: -
Hinge Color	Metal
Hinge Type	Crossbar
Kelvin	4000K
LED IP	IP44
LED Lighting	Yes
Lighting Switch Type	Open / Close Button
Lighting Type	Faucet with LED Lighting
Lumen	1200 LM
Material	VALUE: PVC
Number of Doors	VALUE: 2
Packaged Dimensions (W×D×H)	870 x 220 x 750
Series	Core

VitrA Global
vitra@eczacibasi.com.tr
https://www.vitraglobal.com/ - https://www.instagram.com/vitrabathrooms/

Core Mirror Cabinet

Product Code: 67614

Socket Box	VALUE: -
Soft Close	Yes
Warranty Period (Years)	2

Core Mirror Cabinet

Product Code: 67614

2A Technical Drawing

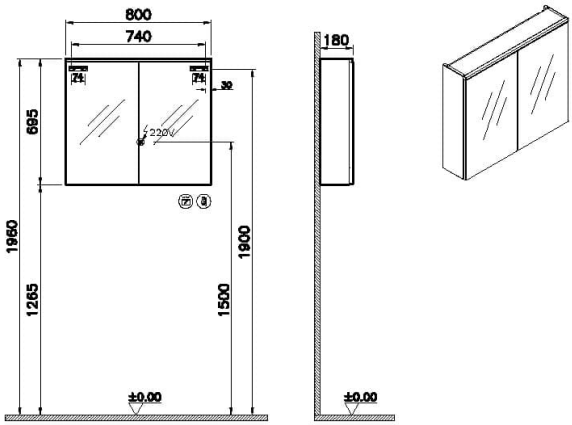

VitrA Global
vitra@eczacibasi.com.tr
https://www.vitraglobal.com/ - https://www.instagram.com/vitrabathrooms/