VitrA

Sento Kids Wall-hung WC

Product Code: 7360B003-0090

Collection: Sento Kids

Technical Specifications

Bidet Function	With bidet pipe
Bidet Nozzle Detail	Standard
Body Material	VC- Vitreous China
Colour	
Design Shape	Round
Designer	VALUE: VitrA Design Team
Dimensions	47
Inner Shape	Wash-down
Installation Detail	Concealed Installation
Material	VALUE: Hygiene
Packaged Dimensions (W×D×H)	395 x 375 x 525
Rim Feature	SmoothFlush

Sento Kids Wall-hung WC

Product Code: 7360B003-0090

Series	Sento Kids
Special Solutions	Children
Toilet Height from Floor	350 mm
Warranty Period (Years)	10

Sento Kids Wall-hung WC

Product Code: 7360B003-0090
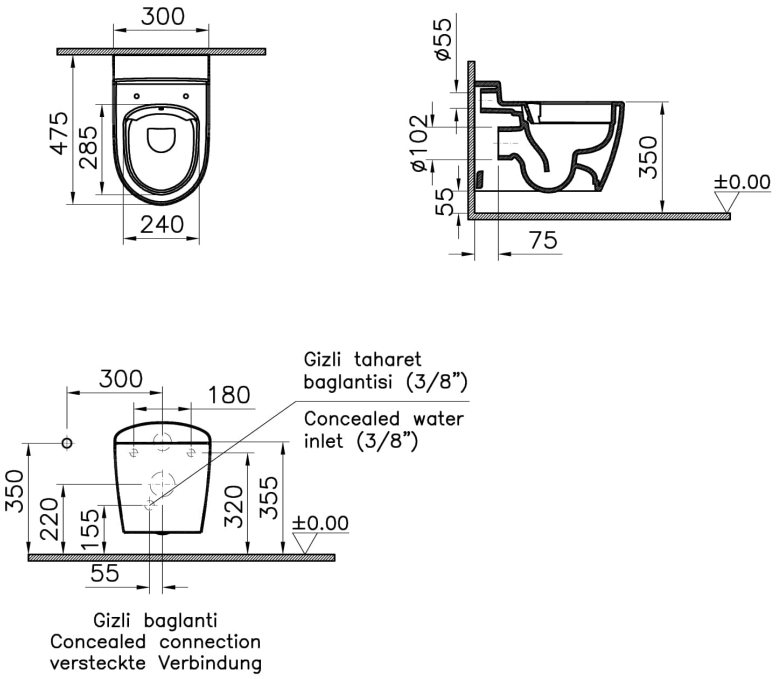
2A Technical Drawing