VitrA

## Minimax Round Basin Mixer

Product Code: A4353374ENGX

Collection:

## Technical Specifications

| | |
|---|---|
| Air Mixing Capability | Evet |
| Body Material | Pirinç |
| Colour | |
| Depth (mm) | 169 |
| Designer | Noa |
| Easy Assembly Feature | Evet |
| Height (mm) | 198 |
| Hose Material | Paslanmaz Çelik Örgülü PEX |
| Installation Type | Countertop |
| Material | PVD |
| Number of Holes | 1 |
| Number of Water Inlets | Çift girişli |

VitrA Global
vitra@eczacibasi.com.tr
https://www.vitraglobal.com/ - https://www.instagram.com/vitrabathrooms/

## Minimax Round Basin Mixer

Product Code: A4353374ENGX

| | |
|---|---|
| Operating Pressure | 0,5-10 Bar(Tav.Edilen:1-5 Bar) |
| Outlet Rotation Angle | Sabit |
| Packaged Dimensions (W×D×H) | 395 x 210 x 75 |
| Siphon Control | Evet |
| Width (mm) | Ø41 |

Minimax Round Basin Mixer

Product Code: A4353374ENGX
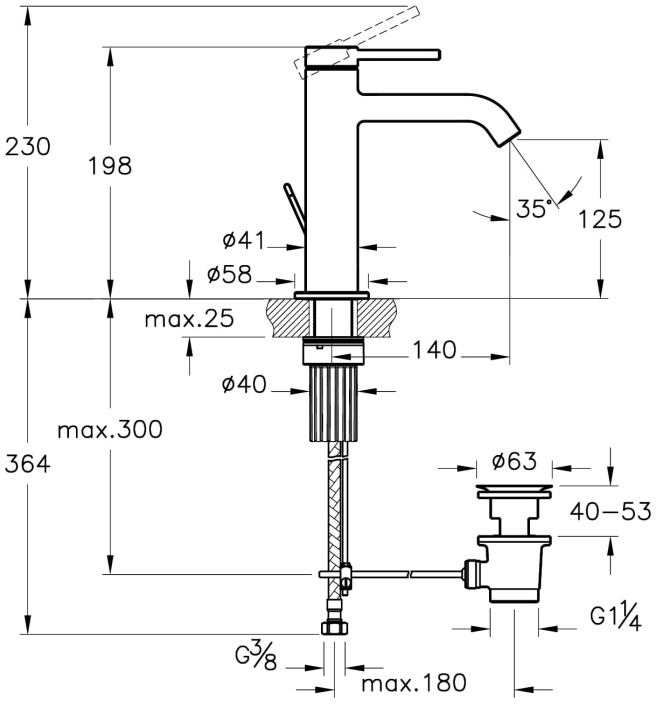
## 2A Technical Drawing